TH1100FBUL - Commercial Flush Bolt for Hollow Metal Door

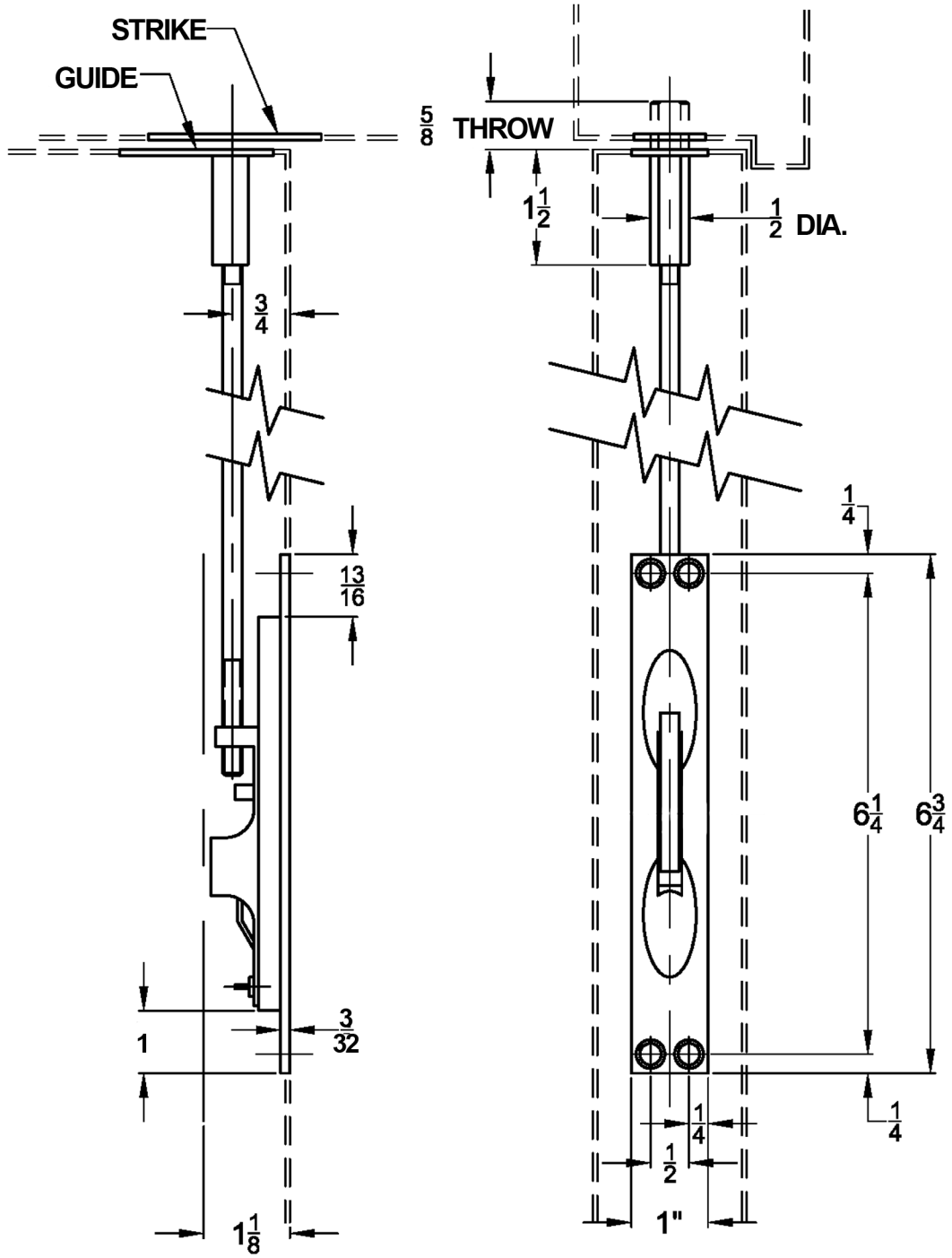

MINIMUM CLEARANCE REQUIRED

GUIDE

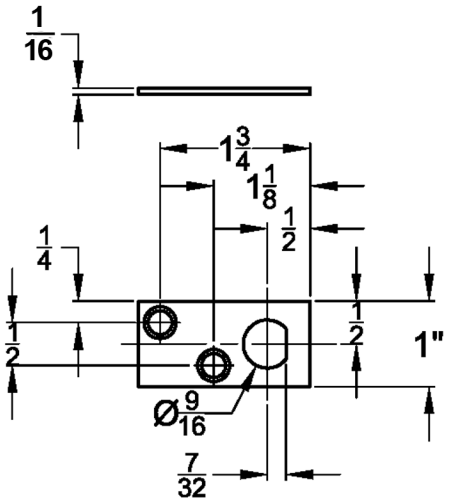

STRIKE

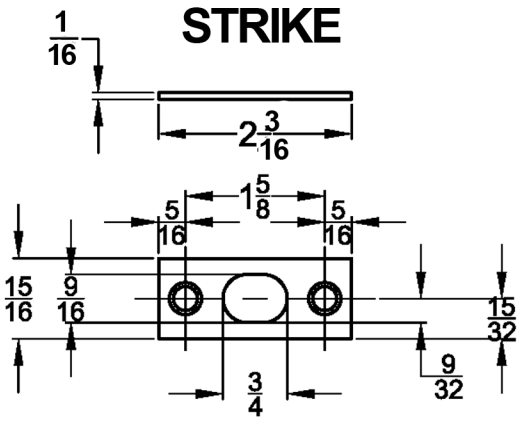

Doorware.com™