Don-Jo D9125 - 2-1/4" Lip Dimpled Strike Plate

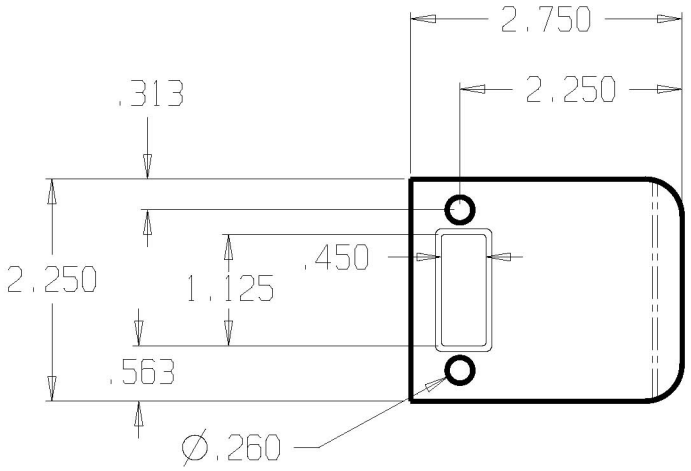

Doorware.com™