NO.	QTY.	PART NAME	MATERIAL
1	1	RIVET PIN	STEEL
2	2	LONG PIN	STEEL
3	16	LINK	STEEL
4	2	CHANNEL PIN	STEEL
5	2	BODY	ZINC
6	2	LONG ROLLER	NYLON 6\6
7	2	SPACER	NYLON 6\6
8	2	SHORT ROLLER	NYLON 6\6

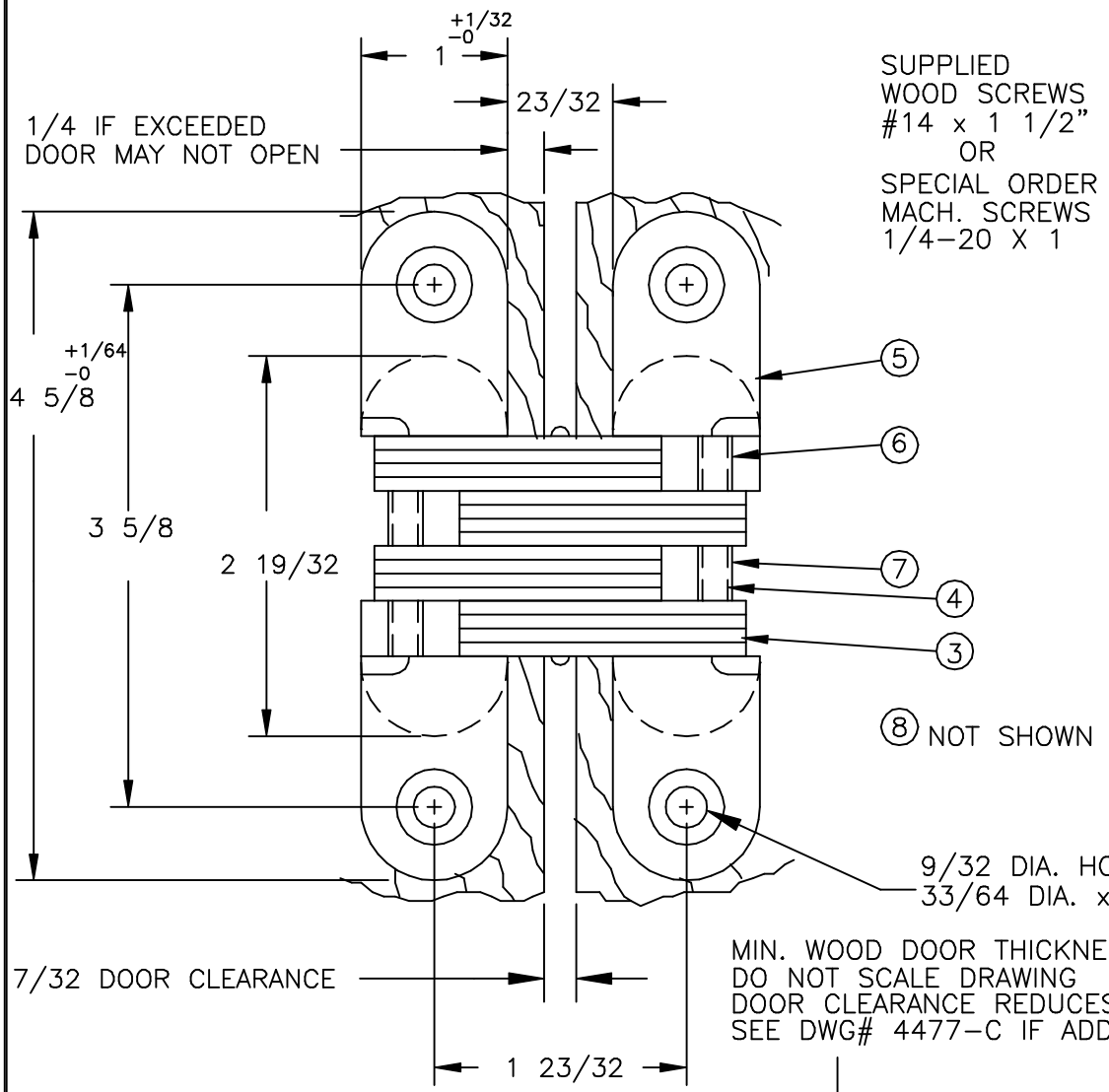

MIN. WOOD DOOR THICKNESS IS 1−3/8 INCHES
DO NOT SCALE DRAWING
DOOR CLEARANCE REDUCES TO 1/64" WHILE CLOSING
SEE DWG# 4477−C IF ADDING MATERIAL TO DOOR FACE

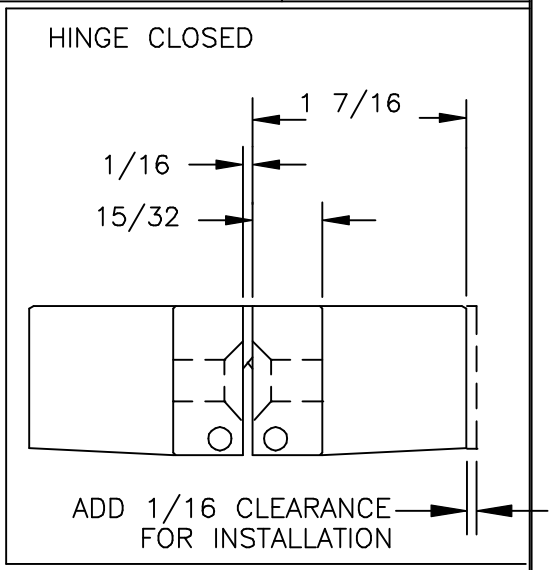

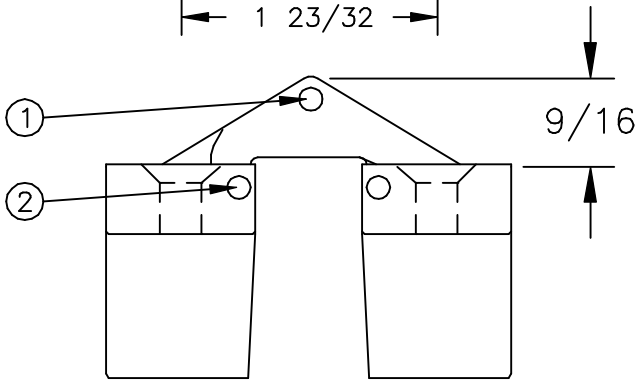

UIP ©Copyright 1998
Universal Industrial Products Co. Inc.
One Coreway Drive
Pioneer, Ohio 43554−0628

HINGE TEMPLATE

#216 SOSS INVISIBLE HINGE

SCALE: NOT TO SCALE

DRAWN BY: R. SEIGNEUR

DATE: 4/8/98

DRAWING # 3952−C